15"
17"

IPC-series

IPC-A150T
IPC-A170T

HANASIS
System Integration Supplier

Windows® Embedded Silver Partner

intel Celeron inside

Fanless

Key Features

- Front Panel Water Resistant (IP-65)
- Toolless Sturucture for Easy maintenance (Patentee)
- Intel® Celeron® 1037U processors
- Industrial Panel PC performance

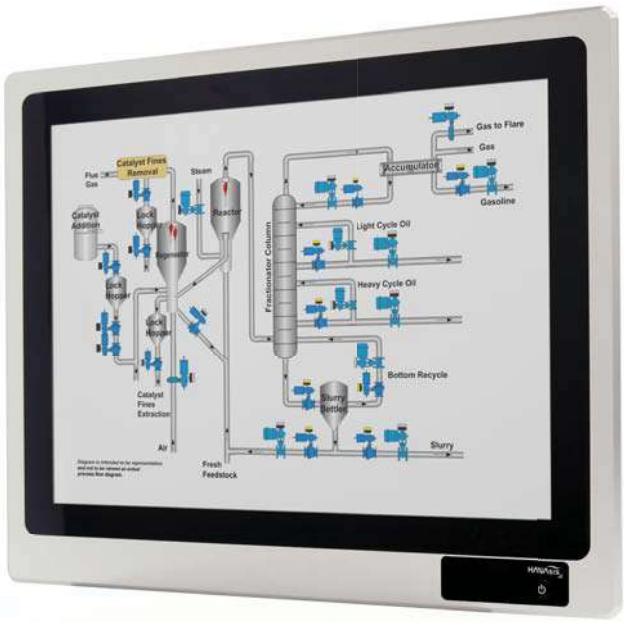

▲ IPC-A150T

▲ IPC-A170T

Specifications

*

Models	IPC-A150T	IPC-A170T
Processor(CPU)	Intel® Celeron® 1037U, Dual Core (2M Cache, 1.8GHz)	
Chipset	Intel® NM70	
Memory	2GB DDR3 1333MHz, SoDIMM (Up to 8GB)	
HDD	2.5", HDD 500GB or SSD 32GB~, m-SATA (32GB~) Support IDE/AHCI mode	
Display	15inch, 1024 X 768, 24Bit	17inch, 1280 X 1024, 24Bit
	Luminance : 300 cd/㎡, Backlight : LED	Luminance : 250 cd/㎡, Backlight : LED
Touch Panel	15", 5-Wire Resistive (True Flat)	17", 5-Wire Resistive (True Flat)
VGA	1EA VGA(DSUB15), Intel® HD Graphics 2500	
LAN	2 EA (Intel® Gigabit LAN)	
Serial (DSUB-9p)	1EA RS-232/422/485 (COM1) 4EA RS-232 (Support Powered COM2/3 by BIOS)	
PS/2	2EA (Keyboard / Mouse)	
USB	4 EA (I/O) (USB2.0)	
Audio	Line-Out, MIC-In, Realtek ALC269 HD2.1 Audio	
Expansion Interface	1EA Full Size m-SATA (SATA-II), 1EA PCIe (x1)	
Cooler & FAN	Fanless	
Power Adaptor	60[W] Adaptor Input AC 100~240V/50~60HZ, DC 12V/5A	
OS supported	POSReady7, 2009 / Win XP / Win Vista / Win7	
Chassis & Case	Aluminum + Steel	
Dimension(W,H,T)	376 x 315 x 61 (mm)	427 x 360 x 61 (mm)
Weight	4.8kg	5.9kg

Optional

OS	Microsoft® Windows XP Windows Vista Windows 7 POSReady2009 POSReady7
Wall Mount	75x75, 100x100mm VESA (Swivel Type / Fixed Type) · Swivel Type · Fixed Type
Wi-Fi	802.11 b/g/n (USB, External type)

IPC-A150T Dimensions

(Unit: mm)
Suggested Cut out Size: 338 x 264 mm

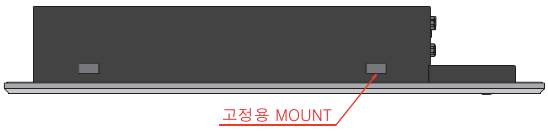

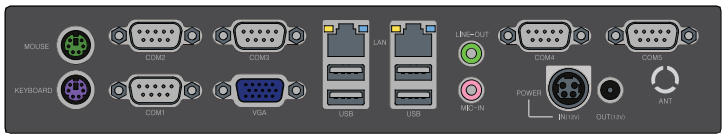

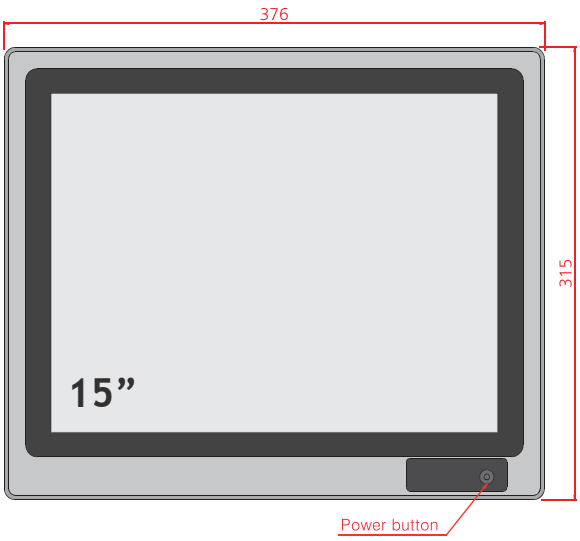

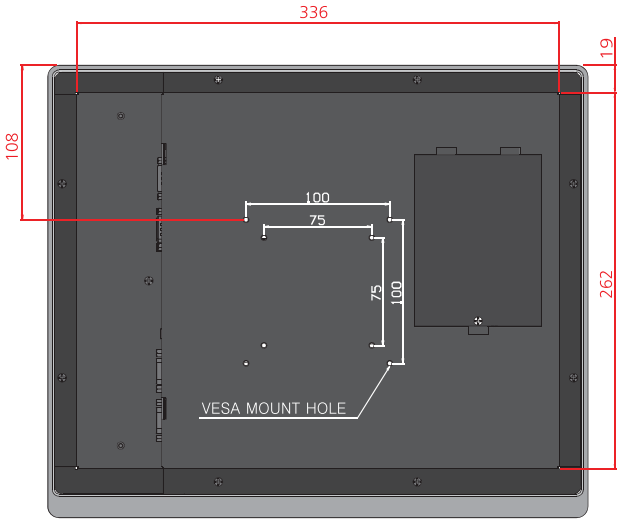

IPC-A170T Dimensions

(Unit: mm)
Suggested Cut out Size: 370 x 307 mm

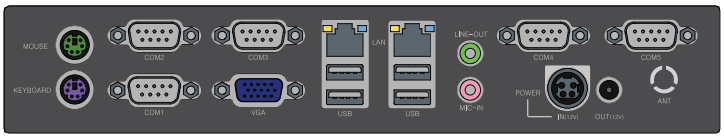

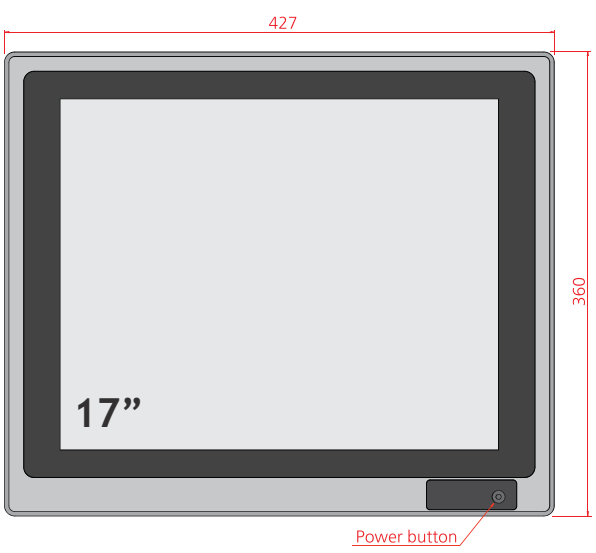

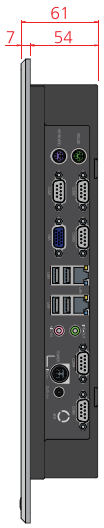

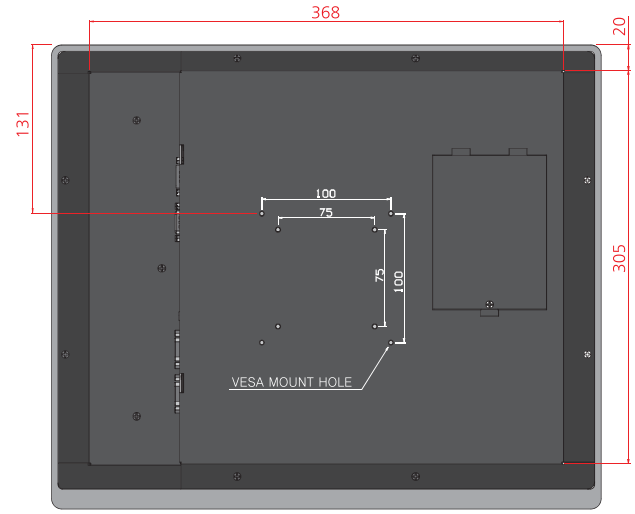

Pos Iberica Solutions S.L
Travessera de Dalt 69
08024 Barcelona
Tel: 932853089 - Fax: 932853059
www.posiberica.com - comercial@posiberica.com